CanadianSolar

INSTALLATION MANUAL OF STANDARD SOLAR MODULES

For professional use only

CONTENTS

1.0 GENERAL INFORMATION 3

1.1 INSTALLATION MANUAL DISCLAIMER 3

1.2 LIMITATION OF LIABILITY 3

2.0 SAFETY PRECAUTIONS 3

2.1 INFORMATION PURSUANT TO ART. 33 OF THE REACH REGULATION 4

3.0 MECHANICAL / ELECTRICAL SPECIFICATIONS 4

4.0 UNPACKING AND STORAGE 5

5.0 MODULE INSTALLATION 6

5.1 MODULE WIRING 9

5.2 GROUNDING 12

6.0 MOUNTING INSTRUCTIONS 13

6.1 MOUNTING METHOD: BOLTING 14

6.2 MOUNTING METHOD: CLAMPING 16

6.3 INSERTION SYSTEMS 23

6.4 MOUNTING METHODS WITH SINGLE-AXIS TRACKER 24

7.0 MAINTENANCE 26

8.0 MODULE CLEANING GUIDELINES 26

ANNEX A: MECHANICAL AND ELECTRICAL RATINGS 28

ANNEX B: GUIDANCE ON MODULE TEMPERATURE FOR SEVERAL LOCATIONS 35

ANNEX C: INSTALLATIONS USING MODULE LEVEL POWER ELECTRONICS 36

ANNEX D: COASTAL AREA ANTI-CORROSION INSTALLATION GUIDELINES 37

AMENDED EDITIONS AND DATES 41

1.0 GENERAL INFORMATION

This general manual provides important safety information relating to the installation, maintenance and handling of CS-series solar modules.

Professional installer must read these guidelines carefully and strictly follow these instructions. Failure to follow these instructions may result in death, injury or property damage. The installation and handling of PV modules require professional skills and should only be performed by qualified professionals. The installers must inform end-users (consumers) the aforesaid information accordingly. The word "module" or "PV module" used in this manual refers to one or more CS-series solar modules.

This manual is only valid for the standard module types CS1V-MS, CS1VL-MS, CS1U-MS, CS1H-MS, CS1Y-MS, CS3U-P, CS3K-P, CS3W-P, CS3L-P, CS3W-MS, CS3L-MS, CS3LA-MS, CS3LB-MS, CS1HA-MS, CS3Y-MS, CS3Y-P, CS3N-MS, CS3SA-MS, CS6W-MS, CS7L-MS, CS7L-MS-R and CS7N-MS.

Please retain this manual for future reference. We recommend checking www.csisolar.com regularly for the most updated version.

1.1 INSTALLATION MANUAL DISCLAIMER

The information contained in this manual is subject to change by Canadian Solar without prior notice. Canadian Solar gives no warranty of any kind whatsoever, either explicitly or implicitly, with respect to the information contained herein.

In the event of any inconsistency among different language versions of this document, the English version shall prevail. Please refer to our product lists and documents published on our website at: www.csisolar.com as these lists are updated on a regular basis.

1.2 LIMITATION OF LIABILITY

Canadian Solar shall not be held responsible for damages of any kind, including – without limitation – bodily harm, injury or damage to property, in connection with handling PV modules, system installation, or compliance or non-compliance with the instructions set forth in this manual.

2.0 SAFETY PRECAUTIONS

Warning

Before attempting to install, wire, operate and/or service the module and other electrical equipment, all instructions should be read and understood. PV module connectors pass direct current (DC) when exposed to sunlight or other light sources. Contact with electrically active parts of the module, such as terminals, can result in injury or death, irrespective of whether or not the module and the other electrical equipment have been connected.

Avertissement

Toutes les instructions devront être lues et comprises avant de procéder à l'installation, le câblage, l'exploitation et/ou l'entretien des panneaux. Les interconnexions des panneaux conduisent du courant continu (CC) lorsque le panneau est exposé à la lumière du soleil ou à d'autres sources lumineuses. Tout contact avec des éléments sous tension du panneau tels que ses bornes de sortie peut entraîner des blessures ou la mort, que le panneau soit connecté ou non.

General Safety

All modules must be installed by licensed electricians in accordance to the applicable electrical codes such as, the latest National Electrical Code (USA) or Canadian Electric Code (Canada) or other national or international applicable electrical codes.

Protective clothing (non-slip gloves, clothes, etc.) must be worn during installation to prevent direct contact with 30 V DC or greater, and to protect hands from sharp edges.

Prior to installation, remove all metallic jewelry to prevent accidental exposure to live circuits.

When installing modules in light rain, morning dew, take appropriate measures to prevent water ingress into the connector.

Do not allow children or unauthorized persons near the installation site or module storage area.

- **Do not** install modules in strong wind.
- Use electrically insulated tools to reduce the risk of electric shock.
- If the disconnects and over current protection devices (OCPDs) cannot be opened or the inverter cannot be powered down, cover the fronts of the modules in the PV array with an opaque material to stop the production of electricity when installing or working on a module or wiring.
- **Do not** use or install damaged modules.
- Contact with module surfaces or frames may cause electric shock if the front glass is broken or the backsheet is torn.
- The PV module does not contain any serviceable parts. **Do not** attempt to repair any part of the module.
- Keep the junction box cover closed at all times.
- **Do not** disassemble a module or remove any module part.
- **Do not** artificially concentrate sunlight on a module.
- **Do not** connect or disconnect modules when current from the modules or an external source is present.

2.1 INFORMATION PURSUANT TO ART. 33 OF THE REACH REGULATION

Pursuant to Art. 33 of Regulation (EC) No 1907/2006 of the European Parliament and of the Council of 18 December 2006 concerning the Registration, Evaluation, Authorisation and Restriction of Chemicals (REACH), establishing a European Chemicals Agency, amending Directive 1999/45/EC and repealing Council Regulation (EEC) No 793/93 and Commission Regulation (EC) No 1488/94 as well as Council Directive 76/769/EEC and Commission Directives 91/155/EEC, 93/67/EEC, 93/105/EC and 2000/21/EC (the "REACH Regulation"), we inform you that our solar modules contain a Substance of Very High Concern ("SVHC") in a concentration above 0.1 % (weight by weight).

The copper ribbons used in our solar modules to interconnect solar cells use a thin solder coating layer that contains lead (CAS no. 7439-92-1).

Under normal or reasonably foreseeable conditions of use, exposure to the lead that is contained in our solar modules can be excluded. However, a release of, and exposure to, lead can take place (i) when the different components of the solar modules are disassembled, in particular for recycling purposes, and (ii) in instances of fire. Lead may damage fertility or the unborn child, causes damage to organs through prolonged or repeated exposure, is very toxic to aquatic life with long lasting effects, may cause cancer, is very toxic to aquatic life, and may cause harm to breast-fed children.

Therefore, recycling and all other types of comparable disassembly of the solar modules have to be performed by a qualified waste management company, in compliance with national and local waste management regulations.

In the instance of fire, please keep away from the fire, and call the local fire brigade.

3.0 MECHANICAL / ELECTRICAL SPECIFICATIONS

Module electrical ratings are measured under Standard Test Conditions (STC) of 1000 W/m^2 irradiance, with an AM1.5 spectrum, and a cell temperature of 25°C. Detailed electrical and mechanical characteristics of Canadian Solar crystalline silicon PV modules can be found in Annex A (Module Specifications) on www.csisolar.com. Main electrical characteristics at STC are also stated on each module label. Please refer to the datasheet or the product nameplate for the maximum system voltage.

Under certain conditions, a module may produce more current or voltage than its Standard Test Conditions rated power. As a result, the module short-circuit current under STC should be multiplied by 1.25, and a correction factor should be applied to the open-circuit voltage (see Table 1 below), when determining component ratings and capacities. Depending on your local regulations, an additional 1.25 multiplier for the short-circuit current (giving a total multiplier of 1.56) may be applicable when sizing conductors and fuses.

Table 1: Low temperature correction factors for open-circuit voltage

Lowest Expected Ambient Temperature (°C/°F)	Correction Factor
24 to 20 / 76 to 68	1.02
19 to 15 / 67 to 59	1.04
14 to 10 / 58 to 50	1.06
9 to 5 / 49 to 41	1.08
4 to 0 / 40 to 32	1.10
-1 to -5 / 31 to 23	1.12
-6 to -10 / 22 to 14	1.14
-11 to -15 / 13 to 5	1.16
-16 to -20 / 4 to -4	1.18
-21 to -25 / -5 to -13	1.20
-26 to -30 / -14 to -22	1.21
-31 to -35 / -23 to -31	1.23
-36 to -40 / -32 to -40	1.25

Alternatively, a more accurate correction factor for the open-circuit voltage can be calculated using the following formula:

$$C_{Voc} = 1 - \alpha_{Voc} \times (25 - T)$$

T (°C) is the lowest expected ambient temperature at the system installation site.

α_{Voc} (%/°C) is the voltage temperature coefficient of the selected module (refer to corresponding datasheet).

Electrical calculations and design must be performed by a competent engineer or consultant.

Please contact Canadian Solar's technical support team for additional information pertaining to engineering optimization and approval of project specific module string lengths.

4.0 UNPACKING AND STORAGE

NOTICE

PRECAUTIONS

- Modules should be stored in a dry and ventilated environment to avoid direct sunlight and moisture. If modules are stored in an uncontrolled environment, the storage time should be less than 3 months and extra precautions should be taken to prevent connectors from being exposed to moisture or sunlight, like using connector endcaps. In any circumstance, for pallets of modules packaged in landscape orientation, stacking of no more than two layers is allowed, for pallets of modules packaged in portrait orientation, stacking is not allowed.
- When unloading modules pallets from flat truck, please use a crane or a forklift to remove the module pallets. When unloading modules pallets from containers, please use a fork lift to remove the module pallets, and the forklift should be close to the ground in order to avoid the top of module pallets touching the top of the cabinet door. The thickness of forklift teeth should be less than 75mm, and the length of the forklift teeth should be longer than 2300mm, when unloading 6W-MS module pallets with short side. For unloading CS7N-MS and CS7L-MS modules, the thickness of forklift teeth should be less than 75mm, the length of the forklift teeth should be longer than 1250mm and the width of forklift teeth should be wider than 600mm (from middle to middle of the forklift teeth). Consult your Canadian Solar representative for more detailed unloading instructions.
- Unpack module pallets carefully, following the steps shown on the pallet. Unpack, transport and store the modules with care.
- Modules must always be unpacked and installed by two or three people. Always use both hands when handling modules.

- For vertical package, unpacking and handling should be done with care. Visit our website or contact your Canadian Solar representative for more detailed unpacking requirements.

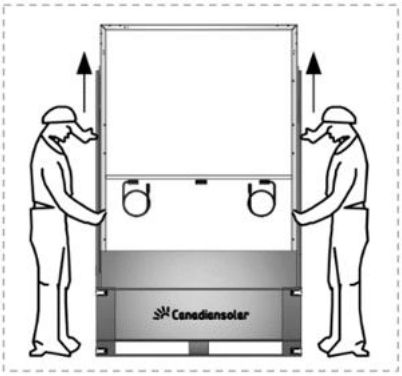

- **Do not** lift modules by their wires or junction box, lift them by the frame.
- **Do not** allow the panels to sag or bow under their own weight when being carried.
- Stacks of modules should contain no more than 12 modules, and the frames should be aligned.
- **Do not** place excessive loads on the module or twist the module frame.
- **Do not** stand, step, walk and/or jump on modules under any circumstances. Localized heavy loads may cause severe micro-cracks at cell level, which in turn may compromise module reliability and void Canadian Solar's warranty.

- **Do not** leave the module backsheet directly in contact with the support structure underneath when handling or installing the module.
- **Do not** carry modules on your head.
- **Do not** drop or place objects (such as tools) on the modules.
- **Do not** use sharp instruments on the modules. Particular care should be taken to avoid module backsheets being damaged by sharp objects, as scratches may directly affect product safety.
- **Do not** leave modules unsupported or unsecured.
- **Do not** change the wiring of bypass diodes.
- Keep all electrical contacts clean and dry at all times.
- **Do not** expose the modules and its electrical contacts to any unauthorized chemical substance (e.g. oil, lubricant, pesticide, etc.).

PRODUCT IDENTIFICATION

Each module has three identical barcodes (one in the laminate under the front glass, the second on the rear side of the module and the third on the frame) that act as a unique identifier. Each module has a unique serial number containing 14 digits or 16 digits.

A nameplate is also affixed to the rear of each module. This nameplate specifies the model type, as well as the main electrical and safety characteristics of the module.

5.0 MODULE INSTALLATION

PRECAUTIONARY MEASURES AND GENERAL SAFETY

- Prior to installing modules please obtain information about any requirements and necessary approvals for the site, installation and inspection from the relevant authorities.
- Check applicable building codes to ensure that the construction or structure (roof, facade, support, etc.) can bear the module system load.
- Canadian Solar modules have been qualified for Application Class A (equivalent to Safety Class II requirements). Modules rated under this class should be used in systems operating at voltage above 50V or power above 240W, where general contact access is anticipated.
- Canadian Solar standard modules have been certified as Type 1 or Type 2 according to UL 61730 and Class C according to IEC 61730-2 for fire class performance, please refer to the datasheet or the product nameplate for the detailed types.
- Consult your local authority for guidelines and requirements for building or structural fire safety.

UL 61730 SYSTEM FIRE RATING REQUIREMENTS

- Photovoltaic systems composed of UL 61730 certified modules mounted on a UL 2703 certified mounting system should be evaluated in combination with roof coverings in accordance with UL 61730 standard, with respect to meeting the same fire classification as the roof assembly.
- Mounting systems with a System Fire Class Rating (Class A, B or C), tested in conjunction with “Type 1” or “Type 2” fire rated modules, are considered acceptable for use with Canadian Solar modules, provided that the mounting system does not violate any other requirements of this manual.
- Any mounting system limitations on inclination or accessories required to maintain a specific System Fire Class Rating should be clearly specified in the installation instructions and UL 2703 certification of the mounting system supplier.
- When installing modules, ensure the assembly is mounted over a fire-resistant roof covering rated for the application.
- The fire rating for this module is only valid when the product is installed as specified in the mechanical mounting instructions.

ENVIRONMENTAL CONDITIONS

- PV modules are intended for use in general open-air climates, as defined in IEC 60721-2-1: Classification of environmental conditions Part 2-1: Environmental conditions appearing in nature. Temperature and humidity.
- It is recommended that PV modules are installed in an environmental temperature range of -40 °C to + 40 °C. For modules operating under such conditions, the 98th-percentile of the module operational temperature must be of 70 °C or lower. CS7L-MS-R modules are designed for application where the 98th-percentile of the module operational temperature is up to 80 °C.
- This environmental temperature range encompasses many locations and installation styles in these locations. Annex B provides the reader with modelled PV module temperature examples, at the 98th-percentile depending on the different mounting method and worldwide locations.
- Please consult the Canadian Solar technical support department for more information on the use of modules in special climates, such as an altitude greater than 2000m.

Do not install modules near open flames or flammable materials.

Do not immerse modules in water or constantly expose modules to water (either fresh or salt, i.e. from fountains, sea spray).

- Exposing modules to salt (i.e. marine environments) or sulfur (i.e. sulfur sources, volcanoes) incurs the risk of module corrosion.
- **Do not** expose modules and their connectors to any unauthorized chemical substances (e.g. oil, lubricant, pesticide, etc.), as modules may incur damages.

NOTICE

- Canadian Solar modules have passed salt mist corrosion resistance test according to IEC 61701, but the corrosion may still occur on where the modules frame is connected to the bracket or where the grounding is connected. Should the installation location be near the ocean, Canadian Solar recommends stainless steel or aluminum materials be used in the areas with direct contact with the PV modules, and the connection point should be protected with anti-corrosion measures. For more information, please contact Canadian Solar technical support team.

INSTALLATION REQUIREMENTS

- Ensure that the module meets the general technical system requirements.
- Ensure that other systems components do not damage the module mechanically or electrically.
- Modules can be wired in series to increase voltage or in parallel to increase current. To connect modules in series, connect the cables from the positive terminal of one module to the negative terminal of the next module.

To connect in parallel, connect the cables from the positive terminal of one module to the positive terminal on the next module.

- The quantity of bypass diodes in the module's junction box provided may vary depending on the model series.
- Only connect the quantity of modules that corresponds to the voltage specifications of the inverters used in the system. In addition, modules must not be connected together to create a voltage higher than the maximum permitted system voltage stated on the module nameplate, even under the worst local temperature conditions (see Table 1 for the correction coefficients that apply to open-circuit voltage).
- A maximum of two strings can be connected in parallel without using an over-current protection device (fuses, etc.) incorporated in series within each string. Three or more strings can be connected in parallel if an appropriate and certified over-current protection device is installed in series within each string. And it shall be ensured in the PV system design that the reverse current of any particular string is lower than the module maximum fuse rating at any circumstances.
- Only modules with similar electrical parameters should be connected in the same string to avoid or minimize mismatch effects in arrays.
- To minimize risk in the event of an indirect lightning strike, avoid forming loops with the wiring when designing the system.
- The recommended maximum series fuse rating is stated in a table in the Annex A.
- Modules should be safely fixed to bear all expected loads, including wind and snow loads.
- A minimum clearance of 6.5 mm (0.25 in) between modules is required to allow for thermal expansion of the frames.
- The small drainage holes on the underside of the module must not be blocked.

OPTIMUM ORIENTATION AND TILT

- To maximize the annual yield, please calculate the optimum orientation and tilt for PV modules in that specific installation site. The highest yields are achieved when sunlight shines perpendicularly onto the PV modules.

AVOID SHADING

- Modules shall not be permanently shaded (including partial shading, spot shading, even shading or uneven shading) under any circumstance. Permanent shading includes shading of the same cell, cell row, or module portion for extended and repeated periods of time (e.g. more than 200 daylight hours over the warrantied service lifetime). Power dissipated in fully or partially shaded cells will result in power loss, reduced yield and can cause localized overheating, which in turn may negatively impact the module service lifetime. Permanent shading may cause accelerated ageing of the encapsulation material and place thermal stress on the bypass diodes. This would void the module's warranty unless properly mitigated through the use of Module Level Power Electronic (MLPE) devices.
- 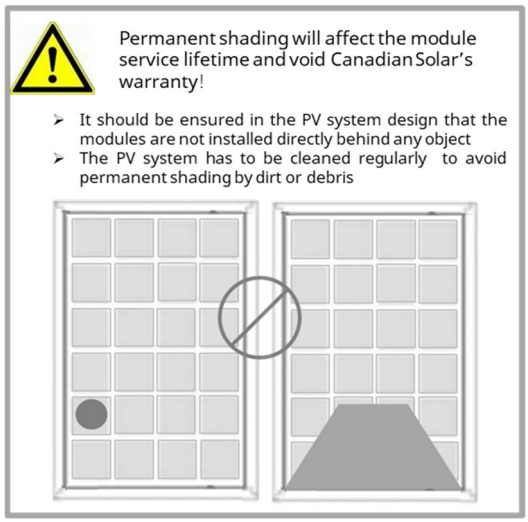

- Regular maintenance is required to keep modules clean. Particular measures should be taken to avoid permanent shading from dirt or debris (e.g., plants, bird droppings, etc).
- Do not install modules directly behind any object (e.g., tree, antenna, etc) to prevent occurrence of permanent shading.
- Even temporary partial shading will reduce the energy yield A module can be considered to be unshaded if its entire surface is free from shading all year round,

including on the shortest day of the year.

- 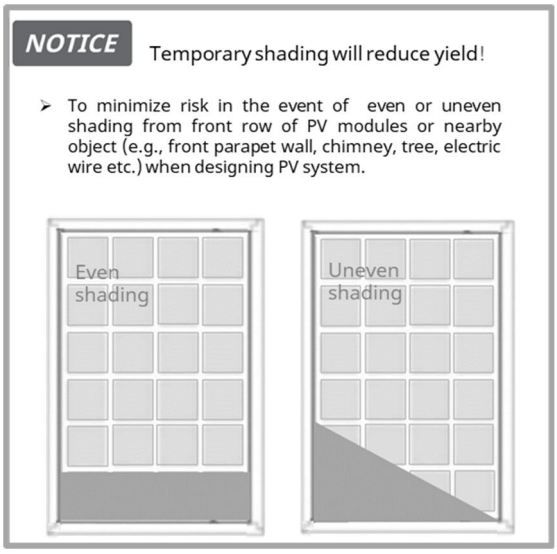

RELIABLE VENTILATION

- Sufficient clearance (at least 102 mm (4.02 in)) between the module frame and the mounting surface is required to allow cooling air to circulate around the back of the module. This also allows condensation or moisture to dissipate.
- According to UL 61730, any other specific clearance required for maintaining a system fire rating should prevail. Detailed clearance requirements pertaining to system fire ratings must be provided by your racking supplier.

5.1 MODULE WIRING

CORRECT WIRING SCHEME

- Cable management scheme should be reviewed and approved by the EPC contractor; in particular required cable lengths should be cross-checked considering the specificities of the tracker structure like bearing house gaps. If longer cable or additional jumper cables are requested, please contact Canadian Solar's sales representative in advance.
- Ensure that the wiring is correct before starting up the system. If the measured open circuit voltage (Voc) and short-circuit current (Isc) differ from the specifications, this indicates that there is a wiring fault.
- When modules have been installed but the system has not been connected to the grid yet, each module string should be kept under open-circuit conditions and proper actions should be taken to avoid dust and moisture penetration inside the connectors.
- In case where a cable connection method not included in the below table is used, please confirm the suitable cable length with Canadian Solar's sales representative.
- For different Canadian Solar module types, Canadian Solar offers optional cable lengths to match various system configurations.
- Please remember that when ordering Canadian Solar modules with portrait cables (short cables) extension cables is provided in each pallet.
- Recommended system cable schemes are shown in table 2 & 3 below:

Table 2: System Cable Scheme for CS3U/CS3K/CS3W/CS3L/CS3LA/CS3LB/CS3Y/CS3N/CS3SA/CS6W/CS7N/CS7L modules

Module types	Standard cables
CS3U-P, **CS3K-P,** **CS3W-P, CS3W-MS,** **CS3L-P, CS3L-MS,** **CS3LA-MS, CS3LB-MS** **CS3Y-P, CS3Y-MS,** **CS3N-MS,** **CS3SA-MS,** **CS6W-MS,**	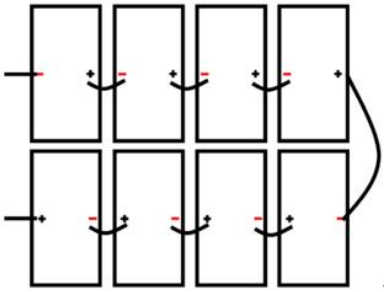 Portrait two rows installation Note: Adjacent two modules (up and down) need to be rotated 180 degrees

CS7N-MS, **CS7L-MS,** **CS7L-MS-R**	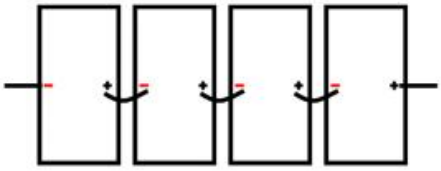 Portrait one row installation
	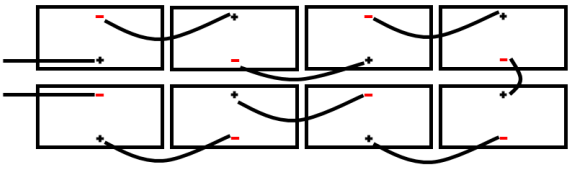 Landscape installation Note: Adjacent two modules (left to right) need to be rotated 180 degrees
CS3U-P, **CS3K-P,** **CS3W-P, CS3W-MS,** **CS3L-P, CS3L-MS,** **CS3LA-MS, CS3LB-MS** **CS3Y-P, CS3Y-MS,** **CS3N-MS,** **CS3SA-MS,** **CS6W-MS**	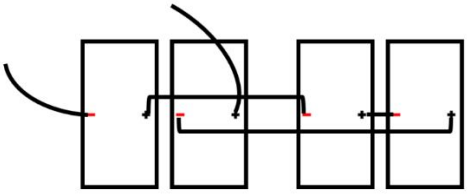 Leap-frog

Table 3: System Cable Scheme for CS1V/CS1VL/CS1H/CS1HA/CS1U/CS1Y modules

Module types	Standard cables
CS1V-MS, CS1VL-MS, CS1H-MS, CS1HA-MS, CS1U-MS, CS1Y-MS	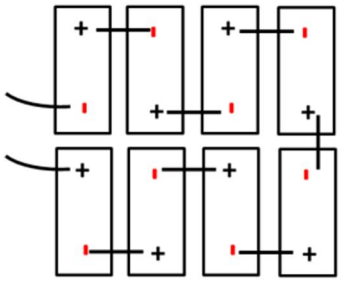 Portrait two rows installation Note: Adjacent two modules (left to right) need to be rotated 180 degrees
	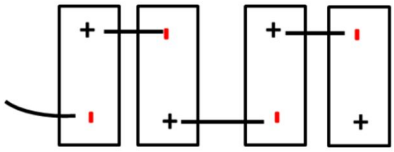 Portrait one row installation Note: Adjacent two modules (left to right) need to be rotated 180 degrees
	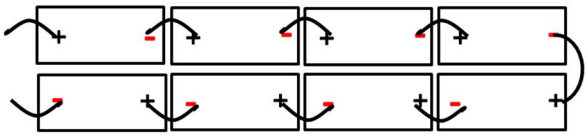 Landscape installation Note: Adjacent two modules (up and down) need to be rotated 180 degrees
	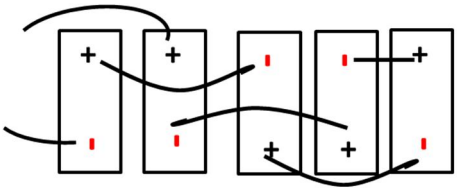 Leapfrog

The maximum distance between two adjacent module frames should be within 50 mm (1.96in) for the side with mounting clamps, and 25 mm (0.98in) for the side without mounting clamps, in order to meet the system cable scheme.

CORRECT CONNECTION OF CONNECTORS

- Make sure that all connections are safe and properly mated. The PV connector should not be subject to stress from the exterior. Connectors should only be used to connect the circuit. They should never be used to turn the circuit on and off.
- Connectors are not waterproof when unmated. When installing modules, connector should be connected to each other as soon as possible or appropriate measures (like using connector endcaps) should be taken to avoid moisture and dust penetrating into the connector.
- **Do not** connect different connectors (manufacturer and type) together.
- Do not clean or precondition the connectors using lubricants or any unauthorized chemical substances.

USE OF SUITABLE MATERIALS

- Only use dedicated solar cable and suitable connectors (wiring should be sheathed in a sunlight-resistant conduit or, if exposed, should itself be sunlight-resistant) that meet local fire, building and electrical regulations. Please ensure that all wiring is in perfect electrical and mechanical condition.
- Installers may only use single-conductor cable listed and labeled as or PV wire which is 90°C wet rated in North America, and single conductor cable with a cross section area of at least 4 mm² (12 AWG), 90°C wet rated in other areas (i.e. IEC 62930 approved), with proper insulation which is able to withstand the maximum possible system open-circuit voltage. For CS7N-MS, CS7L-MS and CS7L-MS-R, Canadian Solar recommends the use of a copper wire of at least 6mm² (10AWG) section.
- Only copper conductor material should be used. Select a suitable conductor gauge to minimize voltage drop and ensure that the conductor ampacity complies with local regulations (i.e. NEC 690.8(D)).

CABLE AND CONNECTOR PROTECTION

- Secure the cables to the mounting system using UV-resistant cable ties. Protect exposed cables from damage by taking appropriate precautions (e.g. placing them inside a metallic raceway like EMT conduit). Avoid exposure to direct sunlight.
- A minimum bending radius of 60 mm (2.36 in) is required when securing the junction box cables to the racking system.
- Protect exposed connectors from weathering damage by taking appropriate precautions. Avoid exposure to direct sunlight.
- Do not place connectors in locations where water could easily accumulate.

5.2 GROUNDING

- For grounding requirements in North America, a module with exposed conductive parts is considered to comply with UL 61730 only when it is electrically grounded in accordance with both the instructions presented below and the requirements of the National Electrical Code. Any grounding means used with Canadian Solar modules should be NRTL certified to UL 467 and UL 2703 standards. Please consult our technical service team for the formal approval process.
- For grounding requirements in other areas, although the modules are certified to Safety Class II, we recommend them to be grounded and that module installation should comply with all applicable local electrical codes and regulations. Minimum size of equipment grounding conductors for ground raceway and equipment from NEC 690.8(D) should be considered. Grounding connections should be installed by a qualified electrician. Connect module frames together using adequate grounding cables: the use of 4-14 mm² (AWG 6-12) copper wire is recommended. Holes provided for this purpose are identified with a grounding symbol ⏚ (IEC 61730-1). All conductive connection junctions must be firmly fixed.
- Do not drill any extra ground holes for convenience as this will void the modules warranty.
- All bolts, nuts, flat washers, lock washers and other relevant hardware should be made of stainless steel, unless otherwise specified.
- Canadian Solar does not provide grounding hardware.

- The grounding method described below is recommended by Canadian Solar.

GROUNDING METHOD: BOLT + TOOTHED NUT + CUP WASHER.

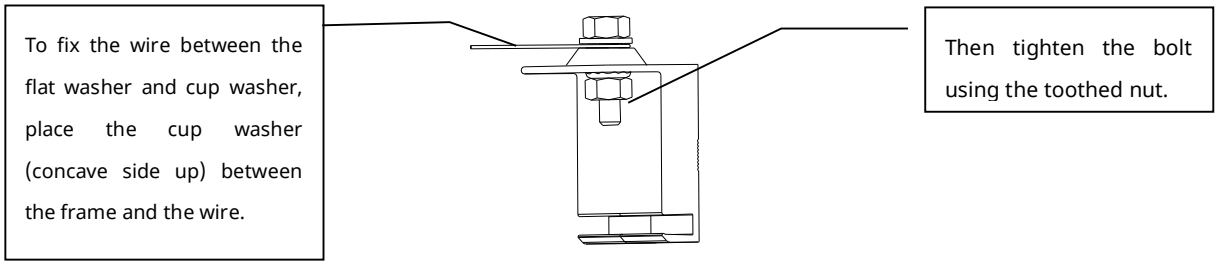

- A grounding kit containing an M5 (3/16") SS cap bolt, an M5 (3/16") SS flat washer, an M5 (3/16") SS cup washer, and an M5 (3/16") SS nut (with teeth) is used to attach copper grounding wire to a pre-drilled grounding hole on the frame (see image above).
- Place the wire between the flat washer and the cup washer. Ensure that the cup washer is positioned between the frame and the wire with the concave side up to prevent galvanic corrosion. Tighten the bolt securely using the SS toothed nut. A wrench may be used to do this. The tightening torque is 3-7 Nm (2.2-5.2 ft-lbs).

6.0 MOUNTING INSTRUCTIONS

The applicable regulations pertaining to work safety, accident prevention and securing the construction site must be observed. Workers and third party personnel shall wear or install fall arrest equipment. Any third party need to be protected against injuries and damages.

- The mounting design must be certified by a registered professional engineer. The mounting design and procedures must comply with all applicable local codes and requirements from all relevant authorities.
- The module is considered to be in compliance with UL 61730 and IEC 61215 only when the module is mounted in the manner specified by the mounting instructions included in this installation manual.
- The system designer and installer are responsible for load calculations and for proper design of support structure.
- Any module without a frame (laminate) shall not be considered to comply with the requirements of UL 61730 unless the module is mounted with hardware that has been tested and evaluated with the module under this standard or by a field Inspection certifying that the installed module complies with the requirements of UL 61730.
- Canadian Solar does not provide mounting hardware.
- Standard modules can be mounted onto a support structure using one of several approved methods as described below. For information about other installation methods, please contact your local representative. Failure to use a recognized installation method will void the Canadian Solar warranty.
- Use appropriate corrosion-proof fastening materials. All mounting hardware (bolts, spring washers, flat washers, nuts) should be hot dip galvanized or stainless steel.
- Use a torque wrench for installation.
- Do not drill additional holes or modify the module frame. Doing so will void the warranty.
- Standard modules can be installed in either landscape or portrait orientations. Refer to the detailed instructions for further guidance. Please note that in areas with heavy snowfall (> 2400 Pa) further countermeasures such the use of additional support bars should be considered to avoid snow loads damaging the lowest row of modules.
- In cases where an additional support bar is

recommended to improve both mechanical stability and long-term module performance, we recommend selecting a sufficiently resistant material. Canadian Solar recommends bars with a minimum thickness of 50 mm (1.97 in). The support bar centerline should be positioned within 100 mm (3.94 in) of the side frame centerline (slight shifts may be necessary to access module grounding holes).

- The loads described in this manual correspond to test loads. For installations complying with IEC 61215-2:2016 and UL 61730, a safety factor of 1.5 should be applied for calculating the equivalent maximum authorized design loads. Project design loads depend on construction, applicable standards, location and local climate. Determination of the design loads is the responsibility of the racking suppliers and/or professional engineers. For detailed information, please follow local structural code or contact your professional structural engineer.

6.1 MOUNTING METHOD: BOLTING

- The mechanical load test with these mounting methods were performed according to IEC 61215.
- Modules should be bolted to supporting structures through the mounting holes in the rear frame flanges only.
- Each module must be securely fastened at a minimum of 4 points on two opposite sides.
- M8 X 1.25 - Grade 8.8 (5/16”-18 Grade B7) galvanized or A2-70 stainless steel bolt and nut should be used.
- The yield strength of bolt and nut should not be less than 450MPa.
- Tightening torques should be 16~20 Nm (11.8~14.75 ft-lbs) for M8 (5/16”-18) coarse thread bolts, depending on bolt class.
- In areas with heavy wind loads, additional mounting points should be used. The system designer and the installer are responsible for correctly calculating the loads and ensuring that the supporting structure meets all the applicable requirements.

Mounting method: Bolting

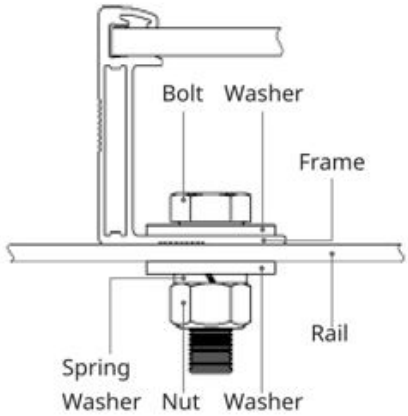

- Modules should be bolted at the following hole locations depending on the configuration and loads:

Table 5: Approved bolting methods

Inner four holes installation method A	Middle four holes installation method A	Outer four holes installation method A
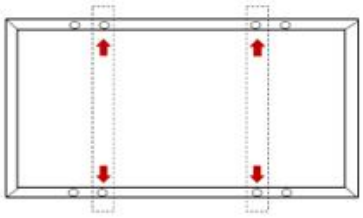	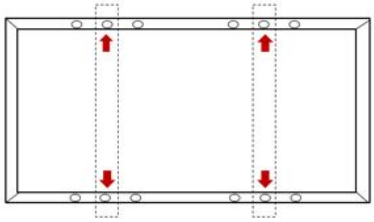	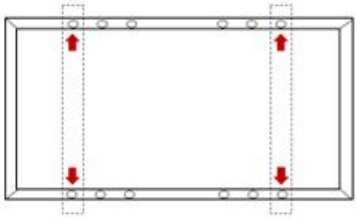
Inner four holes installation method B	**Middle four holes installation method B**	
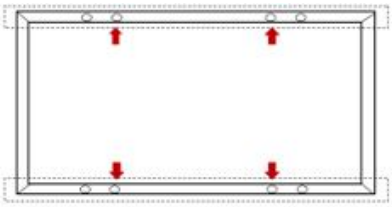	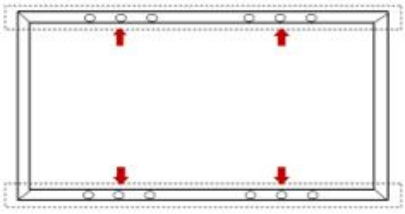	

Installation Method / Module Types	Inner four holes installation method A	Inner four holes installation method B	Middle four holes installation method A	Middle four holes installation method B	Outer four holes installation method A
CS1V/CS1VL/CS3K/ CS1HA	+5400Pa/-2400Pa	+4000Pa/-2400Pa	/	/	/
CS3U	/	/	+5400Pa/-2400Pa	+5400Pa/-2400Pa	/
CS3W/CS1U	/	/	+5400Pa/-2400Pa	+3600Pa/-2400Pa	/
CS3N	+5400Pa/-2400Pa	+3600Pa/-2400Pa	/	/	/
CS3L/CS3LA/CS3LB /CS1H	+5400Pa/-2400Pa	/	/	/	/
CS1Y	+5400Pa/-2400Pa	+5400Pa/-2400Pa	/	/	/
CS3Y/CS3SA/CS6W/ CS7L/CS7N	/	/	/	/	+5400Pa/-2400Pa

Note: The installation method of bolt is based on the experimental results, "/" means not tested.

6.2 MOUNTING METHOD: CLAMPING

- The mechanical load test with these mounting methods were performed according to IEC 61215.
- Top or bottom clamping methods will vary and are dependent on the mounting structures. Please follow the mounting guidelines recommended by the mounting system supplier.
- Each module must be securely fastened at a minimum of four points on two opposite sides. The clamps should be positioned symmetrically. The clamps should be positioned according to the authorized position ranges.
- Install and tighten the module clamps to the mounting rails using the torque stated by the mounting hardware manufacturer. M8 X 1.25 (5/16") bolt and nut are used for this clamping method.
- Tightening torques should be within 16~20 Nm (11.8~14.75 ft-lbs) for M8 (5/16") coarse thread bolts, depending on the bolt class. For the bolt grade, the technical guideline from the fastener suppliers should be followed. Different recommendations from specific clamping hardware suppliers should prevail.
- The system designer and installer are responsible for load calculations and for proper design of support structure.
- Canadian Solar's warranty may be void in cases where improper clamps or unsuitable installation methods are found. When installing inter-modules or end-type clamps, please take the following measures into account:

1. Do not bend the module frame.
2. Do not touch or cast shadows on the front glass.
3. Do not damage the surface of the frame (to the exception of the clamps with bonding pins).
4. Ensure the clamps overlap the module frame by at least **10 mm (0.4 in) for CS6W, CS7N and CS7L**, 5mm (0.2in) for others.
5. Overlap in length by at least
   a) 80 mm (3.15 in) when uplift load > 2400 Pa is required.
   b) 40 mm (1.57 in) when uplift load ≤ 2400 Pa is required.
6. Ensure the clamp thickness is at least 3 mm (0.12 in).

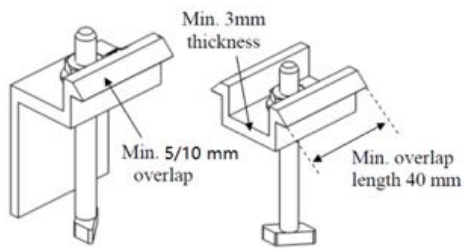

- Clamp material should be anodized aluminum alloy or stainless steel.
- Clamp positions are of crucial importance for the reliability of the installation. The clamp centerlines must only be positioned within the ranges indicated in table below, depending on the configuration and load. For configurations where the mounting rails run parallel to the frame, precautions should be taken to ensure the bottom flange of the module frame overlaps the rail by 15 mm (0.59 in) or more.

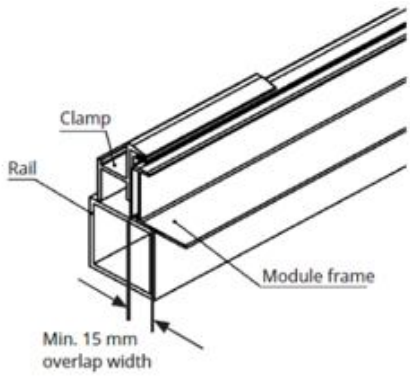

6.2.1 Four clamps on long side of frame and rails perpendicularly to the long side frame

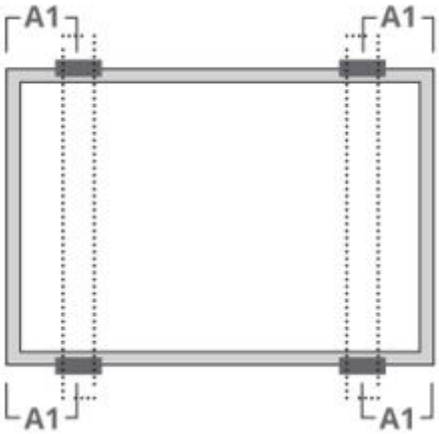

Module Types	Max Mechanical Load (Pa)					
	+2000/ -2000	+2400/ -2400	+3600/ -2400	+5400/ -2400	+5400/ -3600	+7000/ -5400
	A1 Range (mm)					
CS1H	0-219	220-440	/	/	270-330	/
CS1VL/CS1HA	0-219	220-440	/	270-330	/	/
CS1V	0-239	331-550	/	240-330	/	/
CS3K	0-239	331-550	/	/	240-330	/
CS3U/CS3W	/	340-550	/	/	410-490	/
CS1U	/	340-550	/	410-490	/	/
CS1Y	/	/	300-600	/	350-550	400-500
CS3L/CS3LA/CS3LB	0-240	331-550	/	/	240-330	/
CS3N	/	300-600	/	/	400-500	/
CS3Y/CS6W/CS3N/CS7L/CS7N	/	300-600	/	400-500	/	/
CS3SA	/	/	300-600	400-500	/	/

6.2.2 Four clamps on short side of frame and rails perpendicular to the long side frame.

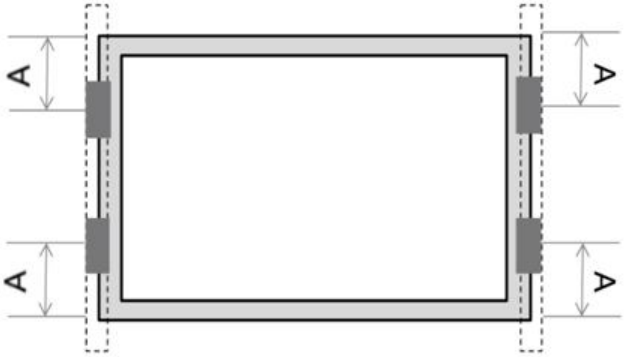

Module Types	A Range (mm)	
	0-200	200-250
	Max Mechanical Load (Pa)	
CS3U	+1200/-1200	+1400/-1400
CS3W	+1000/-1000	+1200/-1200
CS3L	+2000/-2000	+2200/-2200
CS1Y	+1600/-1600	+1800/-1800
CS3N	+2000/-2000	+2200/-2200

6.2.3 Four clamps on long side of frame and rails parallel to the long side frame.

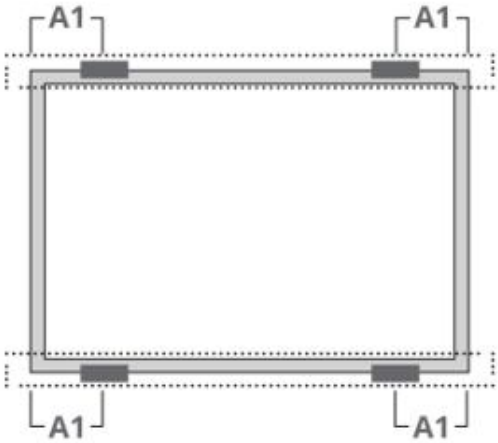

Module Types	Max Mechanical Load (Pa)	
	+4000/-2400	+5400/-2400
	A1 Range (mm)	
CS3U	/	410-490
CS3K/CS1V	240-330	/
CS1VL/CS1HA	270-330	/
CS3N	400-500	/

6.2.4 Two clamps on the long side and two clamps on the short side of frame. Rails run perpendicular to the long side frame.

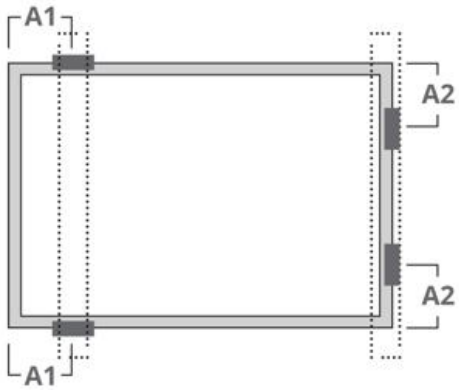

Module Types	Max Mechanical Load (Pa)	
	+2400/-2400	
	A1 Range (mm)	A2 Range (mm)
CS3U	300-550	200-250
CS3K	100-550	200-250
CS3W	600-800	20-250
CS3L	400-600	20-250

6.2.5 Four clamps on short side of frame and rails parallel to the long side frame.

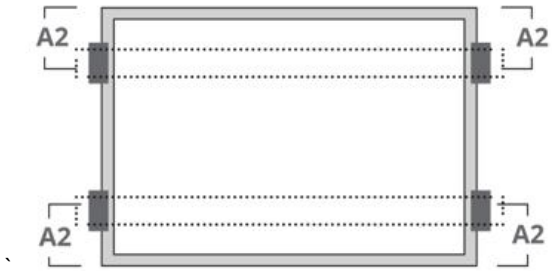

Module Types	A2 Range (mm)			
	0-200	170-210	200-250	230-250
	Max Mechanical Load (Pa)			
CS1VL/CS1HA	/	/	+2400/-2400	/
CS1V	/	+2400/-2400	/	/
CS3K	/	/	+2000/-2000	/
CS3L	/	/	/	+2200/-2200
CS1Y	+1600/-1600	/	+1800/-1800	/
CS3N	+2000/-2000	/	+2200/-2200	/

6.2.6 Four clamp mounting on short side of frame.

Module Types	Max Mechanical Load (Pa)				
	+1000/-1000	+1200/-1200	+2000/-2000	+2200/-2200	+2400/-2400
	A2 Range (mm)				
CS1VL/CS1HA	/	/	/	/	0-250
CS1V	/	/	0-210	/	/
CS3K	/	/	0-200	200-250	/
CS3L	/	/	0-200	200-250	/
CS3W	0-200	200-250	/	/	/
CS3N	/	/	0-200	200-250	/

6.2.7 Four clamp mounting on short side of frame, and an additional support bar placed below the center of the module.

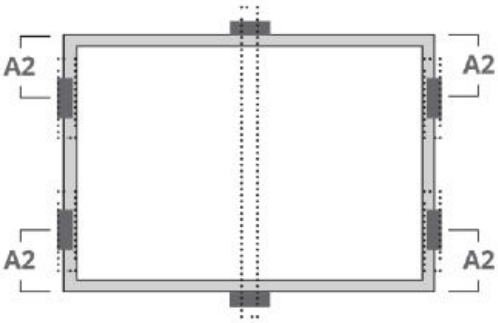

Module Types	Max Mechanical Load (Pa)	
	+4000/-4000	+5400/-2400
	A2 Range (mm)	
CS1VL/CS1HA/CS3K/CS3U	/	200-250
CS1V	/	170-210
CS3N	0-200	/

6.2.8 Six clamps on long side of frame and rails perpendicularly to the long side frame

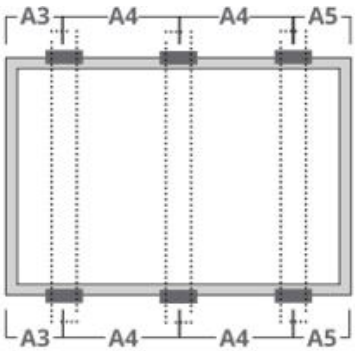

Module Types	Max Mechanical Load (Pa)		
	+5400/-2400	+5400/-3600	+6000/-4000
	A3 & A5 Range (mm)		
CS1H	80-380	/	0-250
CS1U	250-350	/	/
CS3L	/	140-440	/
CS3K	/	/	80-380

6.2.9 Rail-less clamping

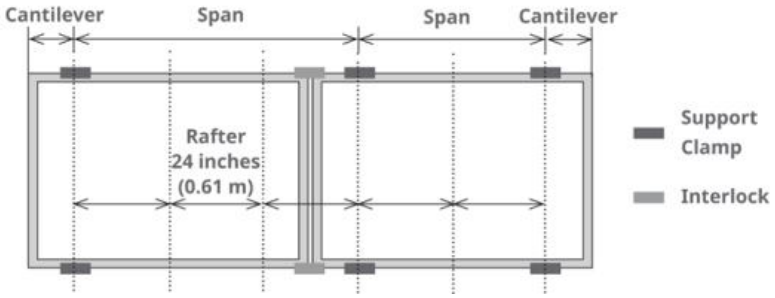

Landscape installation, clamping on long side frame

Modyle Type	Max Span	Max Cantilever length	Downforce	Uplift
CS3K/CS1H	72 inches (1.83 m)	24 inches (0.61 m)	2200 Pa	1400 Pa
	64 inches (1.63 m)	21.3 inches (0.54 m)	2400 Pa	1400 Pa
	48 inches (1.22 m)	16 inches (0.41 m)	3400 Pa	1800 Pa
	32 inches (0.81 m)	10.7 inches (0.27 m)	4800 Pa	2400 Pa
CS1Y	72 inches (1.83 m)	24 inches (0.61 m)	2650 Pa	2400 Pa
	64 inches (1.63 m)	21.3 inches (0.54 m)	2800 Pa	2400 Pa
	48 inches (1.22 m)	16 inches (0.41 m)	3850 Pa	3600 Pa
	32 inches (0.81 m)	10.7 inches (0.27 m)	5400 Pa	3600 Pa
CS3N	72 inches (1.83 m)	24 inches (0.61 m)	2200 Pa	2200Pa
	64 inches (1.63 m)	21.3 inches (0.54 m)	2400 Pa	2200 Pa
	48 inches (1.22 m)	16 inches (0.41 m)	3000 Pa	2400 Pa

	32 inches (0.81 m)	10.7 inches (0.27 m)	3600 Pa	3600 Pa

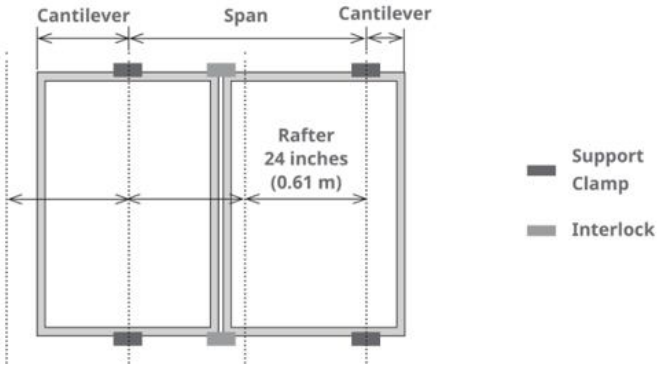

Portrait installation, clamping on short side frame

Modyle Type	Max Span	Max Cantilever length	Downforce	Uplift
CS3K/CS1H	48 inches (1.22 m)	16 inches (0.41 m)	1800 Pa	800 Pa
	32 inches (0.81 m)	10.7 inches (0.27 m)	1800 Pa	1200 Pa
	24 inches (0.61 m)	8 inches (0.2 m)	1800 Pa	1800 Pa
CS1Y	48 inches (1.22 m)	16 inches (0.41 m)	1800 Pa	1800 Pa
	32 inches (0.81 m)	10.7 inches (0.27 m)	1800 Pa	1800 Pa
	24 inches (0.61 m)	8 inches (0.2 m)	2000 Pa	2000 Pa
CS3N	48 inches (1.22 m)	16 inches (0.41 m)	1600 Pa	1600 Pa
	32 inches (0.81 m)	10.7 inches (0.27 m)	1600 Pa	1600 Pa
	24 inches (0.61 m)	8 inches (0.2 m)	1800 Pa	1800 Pa

6.3 INSERTION SYSTEMS

- This mounting method has been certified by VDE and CSA, or qualified by Canadian Solar.
- Insertion methods can vary and depend on the mounting structures. The installer needs to follow the mounting guidelines recommended by the mounting system supplier. Each module must be securely maintained through all its length on two opposite sides. Install and tighten the insertion profiles to the support structure using the hardware and instructions provided by the mounting system manufacturer. The system designer and installer are solely responsible for load calculations and for the proper design of support structure.
- Canadian Solar warranty may be void in cases where improper insertion systems or unsuitable installation methods are found. When installing insertion profiles, please take the following measures into account:

1. Do not bend the module frame.
2. Do not touch the front glass or cast shadow onto it.
3. Do not damage the surface of the frame.
4. Ensure that the insertion profiles overlap the module frame by at least 10 mm (0.39 in).
5. Ensure that the module frame (C-shape) overlaps the insertion profiles by at least 15 mm (0.59 in).
6. Ensure insertion profile thickness and tolerances suit module thickness.

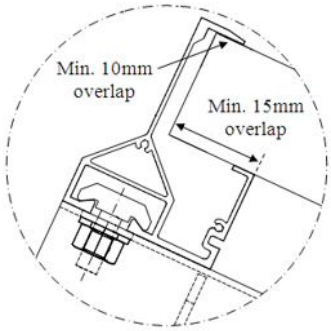

Insertion Method A	Insertion Method B	Insertion Method C
	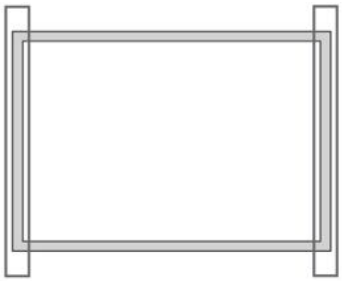	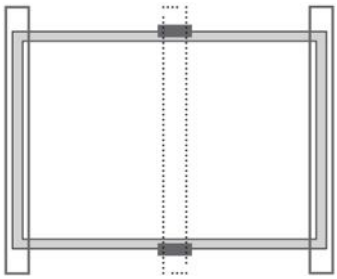
Two insertion profiles run parallel to long side frame.	Two insertion profiles run perpendicularly to long side frame.	An additional support bar used with clamps

Installation Method / Module Types	Insertion Method A	Insertion Method B	Insertion Method C
CS3U	+5400Pa/-2400Pa	+1400Pa/-1400Pa	+5400Pa/-2400Pa
CS1H	+2400Pa/-2400Pa	/	+5400Pa/-2400Pa
CS3W	+4000Pa/-2400Pa	+1200Pa/-1200Pa	/
CS3L	+4000Pa/-2400Pa	+2200Pa/-2200Pa	/
CS1Y	+5400Pa/-2400Pa	+1800Pa/-1800Pa	/
CS3N	/	+1600Pa/-1600Pa	/

6.4 MOUNTING METHODS WITH SINGLE-AXIS TRACKER

- The bolts, washers and clamps used in this section should follow the requirements in 6.1 and 6.2.
- Under any conditions the junction box should not become in contact with the subjacent racking structure except for the torque tube under high loading. For any single axis tracker installation method with portrait one row, bearing house cannot be allowed to locate in junction box position.
- If any racking structures, especially bearing house, have to be located under the modules, any racking structure shall not higher than frame C side.

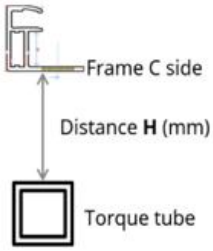

- If your tracker design cannot meet the above distance requirement, please contact Canadian Solar technical support department in writing for advices.

Tracker 1P Bolting method

Install and tighten the module clamps to the mounting rails using the torque stated by the mounting hardware manufacturer. M6 X 1 (1/4”) or M8 X 1.25 (5/16”) bolt and nut are used for this bolting method.

- Tightening torques should be 6~9 Nm (4.5~6.6 ft-lbs) M6 X 1 (1/4”) coarse thread bolts for 10 X 7 mounting hole, M8 X 1.25 (5/16”) for 14 X 9 mounting hole, depending on bolt class.

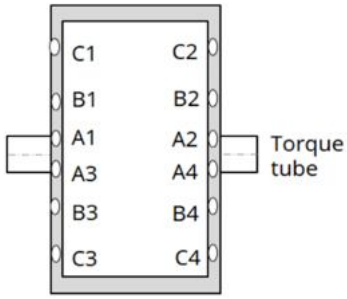

Module type	Mounting hole space (mm)	Fixed mounting hole location	Plain washer outer diameter (mm)	Distance H (mm)	Test load (Pa)
CS6W-MS	A1-A3: 400	A1, A2, A3, A4	18	>40	+1600/ -1600
				≤40	+2000/ -1800

Tracker 1P Clamping method

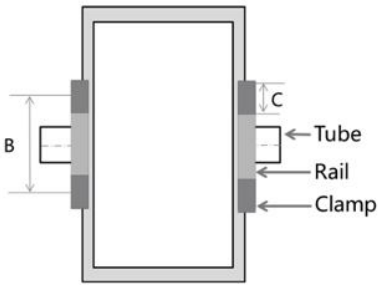

Overlap width between clamp and frame:

Frame top side ≥ 10mm

Frame bottom side ≥ 15mm

Module type	B Value (mm)	Clamp length C (mm)	Distance H (mm)	Test load (Pa)
CS6W-MS	≥400	≥40	≤40	+1600/-1600

Tracker 2P Bolting method

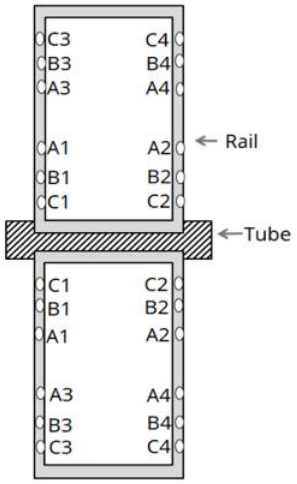

Module type	Mounting hole space (mm)	Mounting hole location	Plain washer outer diameter (mm)	Test load(Pa)
CS6W-MS	A1-A3: 400 B1-B3: 790	B1, B2, A3, A4	18	+1600/-1600
		B1, B2, B3, B4	18	+1800/-1800

The allowable maximum twist angle of the module is 0.5 degree.

- Please contact the tracker manufacturer and Canadian Solar’s technical support department for details in regard to specific projects.

7.0 MAINTENANCE

- **Do not** make modifications to any component of the PV module (diode, junction box, connectors or others).
- Regular maintenance is required to keep modules clear of snow, bird droppings, seeds, pollen, leaves, branches, dirt spots, and dust.
- Modules with sufficient tilt (at least 15°), generally may not require cleaning (rain will have a self-cleaning effect). If the module has become soiled, wash with water and a non-abrasive cleaning implement (sponge) during the cool part of the day. Do not scrape or rub dry dirt away, as this may cause micro scratches.
- Snow should be removed using a soft brush.
- Periodically inspect the system to check the integrity of all wiring and supports.
- To protect against electric shock or injury, electrical or mechanical inspections and maintenance should be performed by qualified personnel only.

8.0 MODULE CLEANING GUIDELINES

This manual covers the requirements for the cleaning procedure of Canadian Solar photovoltaic modules. The purpose of these cleaning guidelines is to provide general information for cleaning Canadian Solar modules. System users and professional installers should read these guidelines carefully and strictly follow these instructions.

Failure to follow these instructions may result in death, injury or damage to the photovoltaic modules. Damages induced by inappropriate cleaning procedures will void Canadian Solar warranty.

SAFETY WARNING

- Cleaning activities create risk of damaging the modules and array components, as well as increasing the potential electric shock hazard.
- Cracked or broken modules represent an electric shock hazard due to leakage currents, and the risk of shock is increased when modules are wet. Before cleaning, thoroughly inspect modules for cracks, damage, and loose connections.
- The voltage and current present in an array during daylight hours are sufficient to cause a lethal electrical shock.
- Ensure that the circuit is disconnected before starting the cleaning procedure as contact with leakage of electrically active parts can result in injury.
- Ensure that the array has been disconnected to other active components (such as inverter or combiner boxes) before starting with the cleaning.
- Wear suitable protection (clothes, insulated gloves, etc.).
- **Do not** immerse the module, partially or totally, in water or any other cleaning solution.
- Rear side cleaning of the modules is not required. If cleaning the rear of a module is desired, care should be taken to ensure there is no damage caused to the backsheet by simply clearing the contaminant by hand or with a soft sponge.

HANDLING NOTICE

NOTICE

- Use a proper cleaning solution and suitable cleaning equipment.
- **Do not** use abrasive or electric cleaners on the module.
- Particular attention should be taken to avoid the module backsheet or frame to come in contact with sharp objects, as scratches may directly affect product safety.
- **Do not** use abrasive cleaners, de-greasers or any unauthorized chemical substance (e.g. oil, lubricant, pesticide, etc.) on the module.
- **Do not** use cleaning corrosive solutions containing hydrofluoric acid, alkali, acetone, or industrial alcohol. Only substances explicitly approved by Canadian Solar are allowed to be used for cleaning modules.
- For cleaning methods using rotating brush, please consult with Canadian Solar's technical support before using.

- Dirt must never be scraped or rubbed away when dry, as this will cause micro-scratches on the glass surface.

OPERATION PREPARATION

- Noticeable dirt must be rubbed away by gentle cleaning implement (soft cloth, sponge or brush with soft bristles).
- Ensure that brushes or agitating tools are not abrasive to glass, EPDM, silicone, aluminum, or steel.
- Conduct the cleaning activities avoiding the hottest hours of the day, in order to avoid thermal stress on the module.

Canadian Solar recommends the following to be used:

- Water with low mineral content
- Near neutral pH water
- The maximum water pressure recommended is 4 MPa (40 bar)

CLEANING METHODS

Method A: Compressed Air

Canadian Solar recommends cleaning the soft dirt (like dust) on modules just with air pressure. This technique can be applied as long as the method is efficient enough considering the existing conditions.

Method B: Wet cleaning

If excessive soiling is present on the module surface, a non-conductive brush, sponge, or other mild agitating method may be used with caution.

- Ensure that any brushes or agitating tools are constructed with non-conductive materials to minimize risk of electric shock and that they are not abrasive to the glass or the aluminum frame.
- If grease is present, an environmental-friendly cleaning agent may be used with caution.

ANNEX A: MECHANICAL AND ELECTRICAL RATINGS

Standard Test Conditions are: Irradiance of 1000 W/m^2, AM1.5 spectrum, and cell temperature of 25°C. The tolerance of electrical characteristics is respectively within ±3% for Pmax, and ±5% for Isc & Voc. Specifications are subject to change without notice.

Table A: Mechanical and electrical ratings under STC

Model Type	Maximum power Pmax <W>	Operating voltage Vmp <V>	Operating current Imp <A>	Open Circuit Voltage Voc <V>	Short Circuit Current Isc <A>	Max. Series Fuse Rating <A>	Overall Dimensions <mm>	Weight <Kg>
CS3U-310P	310	37.2	8.34	44.7	8.88	30	2000 x 992 x 40/35 (78.7 x 39.1 x 1.57/1.38 in)	22.6 / 22.5 (49.8 / 49.6 lbs)
CS3U-315P	315	37.4	8.43	44.9	8.96	30		
CS3U-320P	320	37.6	8.52	45.1	9.04	30		
CS3U-325P	325	37.8	8.60	45.3	9.12	30		
CS3U-330P	330	38.0	8.69	45.5	9.20	30		
CS3U-335P	335	38.2	8.77	45.7	9.28	30		
CS3U-340P	340	38.4	8.86	45.9	9.36	30		
CS3U-345P	345	38.6	8.94	46.1	9.44	30		
CS3U-350P	350	39.2	8.94	46.6	9.51	30		
CS3U-355P	355	39.4	9.02	46.8	9.59	30		
CS3U-360P	360	39.6	9.10	47.0	9.67	30		
CS3U-365P	365	39.8	9.18	47.2	9.75	30		
CS3U-370P	370	40.0	9.26	47.4	9.83	30		
CS3U-375P	375	40.2	9.34	47.6	9.91	30		
CS3U-380P	380	40.4	9.42	47.8	9.99	30		
CS3U-385P	385	40.6	9.50	48.0	10.07	30		
CS3U-390P	390	40.8	9.56	48.6	10.17	30		
CS3U-395P	395	41.0	9.64	48.8	10.24	30		
CS3U-400P	400	41.2	9.71	49.0	10.30	30		
CS3U-405P	405	41.4	9.79	49.2	10.37	30		
CS3U-410P	410	41.6	9.86	49.4	10.43	30		
CS3U-415P	415	41.8	9.93	49.6	10.49	30		
CS3U-420P	420	42.0	10.00	49.8	10.55	30		
CS3K-250P	250	30.0	8.34	36.7	8.98	30	1675 x 992 x 40/35 (65.9 x 39.1 x 1.57/1.38 in)	18.5 (40.8 lbs)
CS3K-255P	255	30.2	8.45	36.9	9.06	30		
CS3K-260P	260	30.4	8.56	37.1	9.14	30		
CS3K-265P	265	30.6	8.66	37.3	9.22	30		
CS3K-270P	270	30.8	8.77	37.5	9.30	30		
CS3K-275P	275	31.0	8.88	37.7	9.38	30		
CS3K-280P	280	31.2	8.98	37.9	9.47	30		

Model Type	Maximum power Pmax <W>	Operating voltage Vmp <V>	Operating current Imp <A>	Open Circuit Voltage Voc <V>	Short Circuit Current Isc <A>	Max. Series Fuse Rating <A>	Overall Dimensions <mm>	Weight <Kg>
CS3K-285P	285	31.4	9.08	38.1	9.56	30		
CS3K-290P	290	32.3	8.98	38.9	9.49	30.		
CS3K-295P	295	32.5	9.08	39.1	9.57	30.		
CS3K-300P	300	32.7	9.18	39.3	9.65	30.		
CS3K-305P	305	32.9	9.28	39.5	9.73	30.		
CS3K-310P	310	33.1	9.37	39.7	9.81	30.		
CS3K-315P	315	33.3	9.46	39.9	9.89	30.		
CS3K-320P	320	33.5	9.56	40.1	9.97	30.		
CS3K-325P	325	33.7	9.65	40.9	10.21	30.		
CS3K-330P	330	33.9	9.74	41.1	10.29	30		
CS3K-335P	335	34.1	9.83	41.3	10.37	30		
CS3K-340P	340	34.3	9.92	41.5	10.45	30		
CS3K-345P	345	34.5	10.00	41.7	10.52	30		
CS3K-350P	350	34.7	10.09	41.9	10.60	30		
CS1V-240MS	240	28.3	8.48	34.7	9.15	15	1638 x 826 x 40 (64.5 x 32.5 x 1.57 in)	15.4 (34.0 lbs)
CS1V-245MS	245	28.6	8.58	34.9	9.22	15		
CS1V-250MS	250	28.8	8.68	35.1	9.29	15		
CS1V-255MS	255	29.0	8.79	35.3	9.37	15		
CS1V-260MS	260	29.2	8.89	35.5	9.44	15		
CS1V-265MS	265	29.4	9.00	35.7	9.51	15		
CS1V-270MS	270	29.6	9.11	35.9	9.59	15		
CS1V-275MS	275	29.8	9.22	36.1	9.66	15		
CS1V-280MS	280	30.0	9.33	36.3	9.74	15		
CS1V-285MS	285	30.2	9.44	36.5	9.82	15		
CS1VL-190MS	190	22.5	8.45	27.6	9.10	15	1322 x 826 x 35 (52.05 x 32.5 x 1.38 in)	12.6 (27.8 lbs)
CS1VL-195MS	195	22.7	8.58	27.8	9.22	15		
CS1VL-200MS	200	22.9	8.73	28.0	9.34	15		
CS1VL-205MS	205	23.1	8.88	28.2	9.46	15		
CS1VL-210MS	210	23.3	9.01	28.4	9.58	15		
CS1VL-215MS	215	23.5	9.15	28.6	9.70	15		
CS1VL-220MS	220	23.7	9.28	28.8	9.82	15		
CS1VL-225MS	225	23.9	9.41	29.0	9.97	15		
CS1K-310MS	310	35.2	8.82	43.1	9.37	20	1675 x 992 x 35 (65.9 x 39.1 x 1.38 in)	18.5 (40.8 lbs)
CS1K-315MS	315	35.4	8.91	43.2	9.44	20		
CS1K-320MS	320	35.6	9.00	43.3	9.51	20		
CS1K-325MS	325	35.8	9.09	43.4	9.58	20		

Model Type	Maximum power Pmax <W>	Operating voltage Vmp <V>	Operating current Imp <A>	Open Circuit Voltage Voc <V>	Short Circuit Current Isc <A>	Max. Series Fuse Rating <A>	Overall Dimensions <mm>	Weight <Kg>
CS1K-330MS	330	36.0	9.18	43.5	9.65	20		
CS1K-335MS	335	36.2	9.27	43.6	9.73	20		
CS1K-340MS	340	36.4	9.35	43.7	9.81	20		
CS1K-345MS	345	36.6	9.43	43.8	9.88	20		
CS1K-350MS	350	36.8	9.51	43.9	9.95	20		
CS1K-355MS	355	37.0	9.60	44.0	10.02	20		
CS1H-315MS	315	36.2	8.85	44.0	9.60	16	1700 x 992 x 35 (66.9 x 39.1 x 1.38 in)	19.2 (42.3 lbs)
CS1H-325MS	325	36.6	8.88	44.1	9.64	16		
CS1H-330MS	330	37.0	8.92	44.2	9.68	16		
CS1H-335MS	335	37.4	8.96	44.3	9.72	16		
CS1H-340MS	340	37.8	9.00	44.5	9.76	16		
CS1H-345MS	345	38.2	9.04	44.6	9.80	16		
CS1U-385MS	385	43.5	8.86	53.1	9.45	15	2078 x 992 x 35 (81.8 x 39.1 x 1.38 in)	23.4 (51.6 lbs)
CS1U-390MS	390	43.7	8.93	53.2	9.50	15		
CS1U-395MS	395	43.9	9.01	53.3	9.55	15		
CS1U-400MS	400	44.1	9.08	53.4	9.60	15		
CS1U-405MS	405	44.3	9.16	53.5	9.65	15		
CS1U-410MS	410	44.5	9.23	53.6	9.70	15		
CS1U-415MS	415	44.7	9.30	53.7	9.75	15		
CS1U-420MS	420	44.9	9.37	53.8	9.80	15		
CS1U-425MS	425	45.1	9.44	53.9	9.85	15		
CS1U-430MS	430	45.3	9.51	54.0	9.90	15		
CS1Y-380MS	380	42.7	8.89	51.5	9.74	16	2021 x 996 x 35 (79.6 x 39.2 x 1.38 in)	24.0 (52.9 lbs)
CS1Y-385MS	385	42.9	8.97	51.7	9.78	16		
CS1Y-390MS	390	43.1	9.05	51.9	9.82	16		
CS1Y-395MS	395	43.3	9.13	52.1	9.86	16		
CS1Y-400MS	400	43.5	9.20	52.3	9.90	16		
CS1Y-405MS	405	43.7	9.27	52.5	9.94	16		
CS1Y-410MS	410	43.8	9.37	52.7	9.98	16		
CS1Y-415MS	415	44.0	9.44	52.8	10.02	16		
CS3W-385P	385	38.1	10.11	46.6	10.66	20	2108 x 1048 x 40/35 (83.0 x 41.3 x 1.57/1.38 in)	24.3 (53.6lbs)
CS3W-390P	390	38.3	10.19	46.8	10.74	20		
CS3W-395P	395	38.5	10.26	47.0	10.82	20		
CS3W-400P	400	38.7	10.34	47.2	10.90	20		
CS3W-405P	405	38.9	10.42	47.4	10.98	20		
CS3W-410P	410	39.1	10.49	47.6	11.06	20		

Model Type	Maximum power Pmax <W>	Operating voltage Vmp <V>	Operating current Imp <A>	Open Circuit Voltage Voc <V>	Short Circuit Current Isc <A>	Max. Series Fuse Rating <A>	Overall Dimensions <mm>	Weight <Kg>
CS3W-415P	415	39.3	10.56	47.8	11.14	20		
CS3W-420P	420	39.5	10.64	48.0	11.26	20		
CS3W-425P	425	39.7	10.71	48.2	11.29	20		
CS3W-430P	430	39.9	10.78	48.4	11.32	20		
CS3W-435P	435	40.1	10.85	48.6	11.35	20		
CS3W-440P	440	40.3	10.92	48.7	11.40	20		
CS3W-445P	445	40.5	10.99	48.8	11.45	20		
CS3L-320P	320	31.8	10.07	38.8	10.66	20	1765 x 1048 x 40/35 (69.5 x 41.3 x 1.57/1.38 in)	20.5 (45.2lbs)
CS3L-325P	325	32.0	10.16	39.0	10.74	20		
CS3L-330P	330	32.2	10.24	39.2	10.82	20		
CS3L-335P	335	32.4	10.34	39.4	10.90	20		
CS3L-340P	340	32.6	10.43	39.6	10.98	20		
CS3L-345P	345	32.8	10.52	39.8	11.06	20		
CS3L-350P	350	33.0	10.61	40.2	11.24	20		
CS3L-355P	355	33.2	10.70	40.4	11.31	20		
CS3L-360P	360	33.4	10.78	40.6	11.37	20		
CS3L-365P	365	33.6	10.87	40.8	11.44	20		
CS3L-370P	370	33.8	10.95	41.0	11.51	20		
CS3L-375P	375	34.0	11.03	41.2	11.59	20		
CS3L-380P	380	34.2	11.12	41.4	11.68	20		
CS3W-415MS	415	39.7	10.46	47.7	11.22	20	2108 x 1048 x 40/35 (83.0 x 41.3 x 1.57/1.38 in)	24.3 (53.6lbs)
CS3W-420MS	420	39.9	10.53	47.9	11.27	20		
CS3W-425MS	425	40.1	10.60	48.1	11.32	20		
CS3W-430MS	430	40.3	10.68	48.3	11.37	20		
CS3W-435MS	435	40.5	10.75	48.5	11.42	20		
CS3W-440MS	440	40.7	10.82	48.7	11.48	20		
CS3W-445MS	445	40.9	10.89	48.9	11.54	20		
CS3W-450MS	450	41.1	10.96	49.1	11.60	20		
CS3W-455MS	455	41.3	11.02	49.3	11.66	20		
CS3W-460MS	460	41.5	11.09	49.5	11.72	20		
CS3W-465MS	465	41.7	11.16	49.7	11.78	20		
CS3W-470MS	470	41.9	11.22	49.9	11.84	20		
CS3L-345MS	345	33.1	10.43	39.8	11.23	20	1765 x 1048 x 40/35 (69.5 x 41.3 x 1.57/1.38 in)	20.5 (45.2 lbs)
CS3L-350MS	350	33.3	10.52	40.0	11.28	20		
CS3L-355MS	355	33.5	10.61	40.2	11.33	20		
CS3L-360MS	360	33.7	10.69	40.4	11.40	20		

Model Type	Maximum power Pmax <W>	Operating voltage Vmp <V>	Operating current Imp <A>	Open Circuit Voltage Voc <V>	Short Circuit Current Isc <A>	Max. Series Fuse Rating <A>	Overall Dimensions <mm>	Weight <Kg>
CS3L-365MS	365	33.9	10.78	40.6	11.47	20		
CS3L-370MS	370	34.1	10.86	40.8	11.54	20		
CS3L-375MS	375	34.3	10.94	41.0	11.61	20		
CS3L-380MS	380	34.5	11.02	41.2	11.68	20		
CS3L-385MS	385	34.7	11.10	41.4	11.75	20		
CS3L-390MS	390	34.9	11.18	41.6	11.82	20		
CS3LA-290MS	290	26.9	10.78	32.5	11.47	20	1424 x 1048 x 35 (56.1 x 41.3 x 1.38 in)	17.0 (37.5 lbs)
CS3LA-295MS	295	27.2	10.86	32.6	11.54	20		
CS3LA-300MS	300	27.4	10.94	32.8	11.61	20		
CS3LA-305MS	305	27.7	11.02	33.0	11.68	20		
CS3LB-240MS	240	22.4	10.71	27.1	11.47	20	1765 x 709 x 35 (69.5 x 27.9 x 1.38 in)	14.5 (32.0 lbs)
CS3LB-245MS	245	22.7	10.82	27.2	11.54	20		
CS3LB-250MS	250	22.9	10.94	27.3	11.61	20		
CS3LB-255MS	255	23.1	11.05	27.5	11.72	20		
CS1HA-265MS	265	29.9	8.86	36.1	9.45	15	1395 x 992 x 35 (54.9 x 39.1 x 1.38 in)	15.8 (34.8Ibs)
CS1HA-270MS	270	30.3	8.92	36.3	9.49	15		
CS1HA-275MS	275	30.6	8.99	36.5	9.53	15		
CS1HA-280MS	280	30.9	9.07	36.8	9.57	15		
CS1HA-285MS	285	31.2	9.14	37.2	9.61	15		
CS3Y-420P	420	41.2	10.20	50.4	10.98	20	2252 x 1048 x 35 (88.7 x 41.3 x 1.38 in)	25.7 (56.7 lbs)
CS3Y-425P	425	41.4	10.27	50.6	11.03	20		
CS3Y-430P	430	41.6	10.34	50.8	11.08	20		
CS3Y-435P	435	41.8	10.41	51.0	11.13	20		
CS3Y-440P	440	42.0	10.48	51.2	11.18	20		
CS3Y-445P	445	42.2	10.55	51.4	11.23	20		
CS3Y-450P	450	42.4	10.62	51.6	11.28	20		
CS3Y-455P	455	42.6	10.69	51.8	11.33	20		
CS3Y-460P	460	42.8	10.75	52.0	11.38	20		
CS3Y-465P	465	43.0	10.82	52.2	11.43	20		
CS3Y-470P	470	43.2	10.88	52.4	11.48	20		
CS3Y-475P	475	43.4	10.95	52.6	11.53	20		
CS3Y-480P	480	43.6	11.01	52.8	11.58	20		
CS3Y-485P	485	43.8	11.08	53.0	11.63	20		
CS3Y-490P	490	44.0	11.14	53.2	11.68	20		
CS3Y-495P	495	44.2	11.20	53.4	11.73	20		
CS3Y-465MS	465	43.6	10.67	52.3	11.42	20		

Model Type	Maximum power Pmax <W>	Operating voltage Vmp <V>	Operating current Imp <A>	Open Circuit Voltage Voc <V>	Short Circuit Current Isc <A>	Max. Series Fuse Rating <A>	Overall Dimensions <mm>	Weight <Kg>
CS3Y-470MS	470	43.8	10.74	52.5	11.47	20	2252 x 1048 x 35 (88.7 x 41.3 x 1.38 in)	25.7 (56.7 lbs)
CS3Y-475MS	475	44.0	10.81	52.7	11.52	20		
CS3Y-480MS	480	44.2	10.87	52.9	11.57	20		
CS3Y-485MS	485	44.4	10.94	53.1	11.62	20		
CS3Y-490MS	490	44.6	11.00	53.3	11.67	20		
CS3Y-495MS	495	44.8	11.06	53.5	11.72	20		
CS3Y-500MS	500	45.0	11.12	53.7	11.77	20		
CS3Y-505MS	505	45.2	11.18	53.9	11.82	20		
CS3Y-510MS	510	45.4	11.24	54.1	11.87	20		
CS3SA-320MS	320	33.5	9.57	40.1	10.22	20	1680 x 996 x 35 (66.1 x 39.2 x 1.38 in)	18.8 (41.4 lbs)
CS3SA-325MS	325	33.7	9.66	40.3	10.30	20		
CS3SA-330MS	330	33.9	9.75	40.5	10.38	20		
CS3SA-335MS	335	34.1	9.84	40.7	10.46	20		
CS3SA-340MS	340	34.3	9.93	40.9	10.54	20		
CS3N-385MS	385	36.6	10.52	43.9	11.32	20	1940 x 1048 x 35 (76.4 x 41.3 x 1.38 in)	22.5 (49.6 lbs)
CS3N-390MS	390	36.8	10.60	44.1	11.38	20		
CS3N-395MS	395	37.0	10.68	44.3	11.44	20		
CS3N-400MS	400	37.2	10.76	44.5	11.50	20		
CS3N-405MS	405	37.4	10.83	44.7	11.56	20		
CS3N-410MS	410	37.6	10.92	44.9	11.62	20		
CS3N-415MS	415	37.8	10.98	45.1	11.68	20		
CS3N-420MS	420	38.0	11..06	45.3	11.74	20		
CS3N-425MS	425	38.2	11.13	45.5	11.80	20		
CS6W-515MS	515	40.3	12.78	48.2	13.65	25	2261 x 1134 x 35 (89.0 x 44.6 x 1.38 in)	28.2 (62.2 lbs)
CS6W-520MS	520	40.5	12.84	48.4	13.70	25		
CS6W-525MS	525	40.7	12.90	48.6	13.75	25		
CS6W-530MS	530	40.9	12.96	48.8	13.80	25		
CS6W-535MS	535	41.1	13.02	49.0	13.85	25		
CS6W-540MS	540	41.3	13.08	49.2	13.90	25		
CS6W-545MS	545	41.5	13.14	49.4	13.95	25		
CS6W-550MS	550	41.7	13.20	49.6	14.00	25		
CS6W-555MS	555	41.9	13.25	49.8	14.05	25		
CS6W-560MS	560	42.1	13.31	50.0	14.10	25		
CS7N-635MS	635	37.3	17.03	44.4	18.27	30	2384 × 1303 × 35 (93.9 × 51.3 × 1.38 in)	34.4 (75.8 lbs)
CS7N-640MS	640	37.5	17.07	44.6	18.31	30		
CS7N-645MS	645	37.7	17.11	44.8	18.35	30		

Model Type	Maximum power Pmax <W>	Operating voltage Vmp <V>	Operating current Imp <A>	Open Circuit Voltage Voc <V>	Short Circuit Current Isc <A>	Max. Series Fuse Rating <A>	Overall Dimensions <mm>	Weight <Kg>
CS7N-650MS	650	37.9	17.16	45.0	18.39	30		
CS7N-655MS	655	38.1	17.20	45.2	18.43	30		
CS7N-660MS	660	38.3	17.24	45.4	18.47	30		
CS7N-665MS	665	38.5	17.28	45.6	18.51	30		
CS7N-670MS	670	38.7	17.32	45.8	18.55	30		
CS7L-575MS	575	33.9	16.97	40.3	18.22	30	2172 x 1303 x 35 (85.5 × 51.3 × 1.38 in)	31.4 (69.2 lbs)
CS7L-580MS	580	34.1	17.02	40.5	18.27	30		
CS7L-585MS	585	34.3	17.06	40.7	18.32	30		
CS7L-590MS	590	34.5	17.11	40.9	18.37	30		
CS7L-595MS	595	34.7	17.15	41.1	18.42	30		
CS7L-600MS	600	34.9	17.20	41.3	18.47	30		
CS7L-605MS	605	35.1	17.25	41.5	18.52	30		
CS7L-610MS	610	35.3	17.29	41.7	18.57	30		
CS7L-575MS-R	575	33.9	16.97	40.3	18.22	30	2172 x 1303 x 35 (85.5 × 51.3 × 1.38 in)	31.4 (69.2 lbs)
CS7L-580MS-R	580	34.1	17.02	40.5	18.27	30		
CS7L-585MS-R	585	34.3	17.06	40.7	18.32	30		
CS7L-590MS-R	590	34.5	17.11	40.9	18.37	30		
CS7L-595MS-R	595	34.7	17.15	41.1	18.42	30		
CS7L-600MS-R	600	34.9	17.20	41.3	18.47	30		
CS7L-605MS-R	605	35.1	17.25	41.5	18.52	30		
CS7L-610MS-R	610	35.3	17.29	41.7	18.57	30		

- The recommended maximum series fuse rating is stated in table A above.

ANNEX B: GUIDANCE ON MODULE TEMPERATURE FOR SEVERAL LOCATIONS

- The operational temperature of a PV module changes during the day and also from day to day throughout the year. The 98th-percentile temperature represents the temperature that is larger than 98% of all the temperatures, and consequently it is met or exceeded only 2% of the time.
- The 98th-percentile temperature is to be determined from measurements taken on hourly-basis, or even more frequently. For a standard year, the 98th-percentile temperature would be met or exceeded 175.2 hours.
- The operational module temperature is influenced by the environmental temperature but also by how the module is installed (e.g. mounting distance to rooftop, array size, array spacing and anti-nesting features), as it may allow a more efficient ventilation. The graphics below from IEC 63126 show this influence, the maps presented here are a general guidance and assumed conservative, please contact your local sales representative for further information.
- For Open-rack it can be seen how the 70°C are never exceeded in any of the locations, while for parallel to the roof mounted modules (not in-roof) this value can be surpassed for some locations.

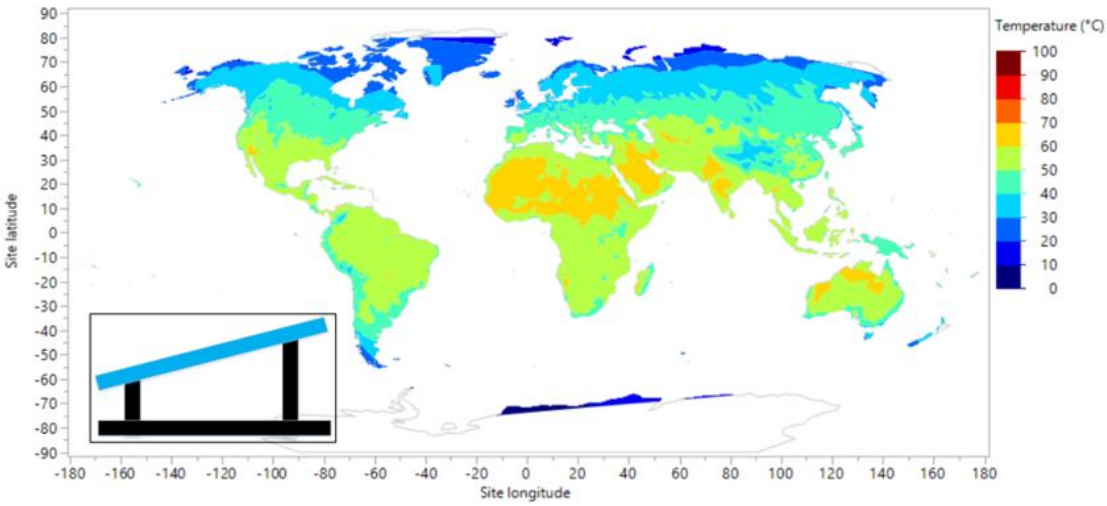

Figure B.1 – 98th-percentile temperature for an open-rack, or thermally unrestricted

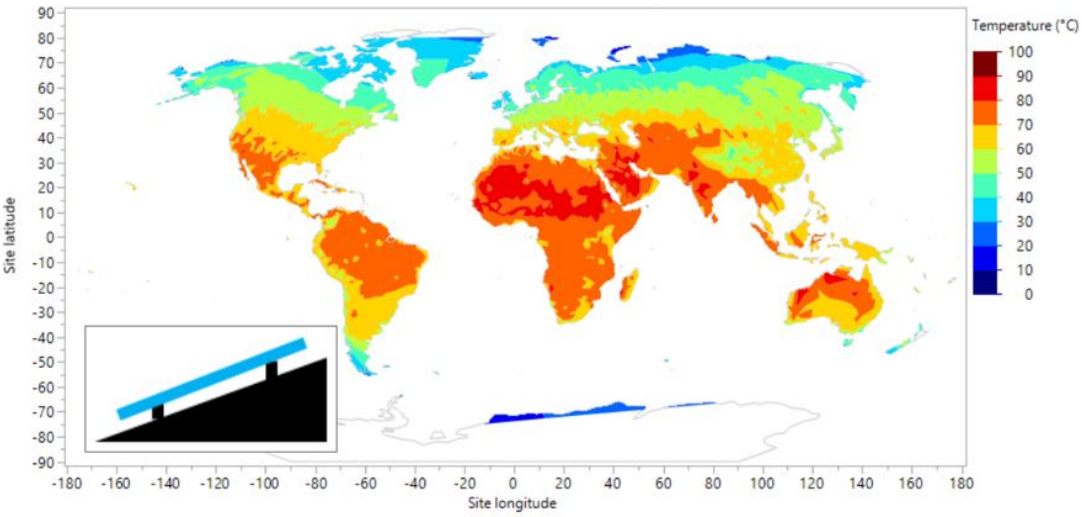

Figure B.2 – 98th-percentile temperature for a close-roof mounted

ANNEX C: INSTALLATIONS USING MODULE LEVEL POWER ELECTRONICS

- This section is applicable to all Canadian Solar standard module types referred to in this installation manual.
- Module-level power electronics (MLPE) are devices that can be incorporated into a solar system to improve its performance in certain conditions (especially where shade is present) and to reduce shock hazard for emergency responders. MLPE devices can be supplied as a 'retro-fit' system made by third-party supplier.
- Module certification testing does not include MLPE devices.
- When installing MLPE devices with Canadian Solar modules, follow the instructions of the MLPE supplier and the specific requirements given below. Ensure electrical parameters and limitations of the MLPE devices and the Canadian Solar modules are suitable for one another.
- Failure to comply with these instructions will void the Canadian Solar warranty.

INSTALLATION

- When choosing to mount the MLPE device to the module frame, follow the MLPE supplier instructions to ensure optimal mounting of the MLPE device and prevent any slippage during operation.
- Canadian Solar recommends the MLPE device be installed close to a corner of the module frame.
- When choosing to mount the MLPE device to the mounting structure, please refer to the instructions provided by the MLPE supplier.
- **Do not** cover the module nameplate or junction boxes when installing the MLPE devices on the rear of the modules.
- **Do not** use frame mounting holes to install the MLPE device.
- **Do not** drill extra holes in the frame to install the MLPE device.
- The distance between the MLPE device and the module backsheet should be larger than 20mm.

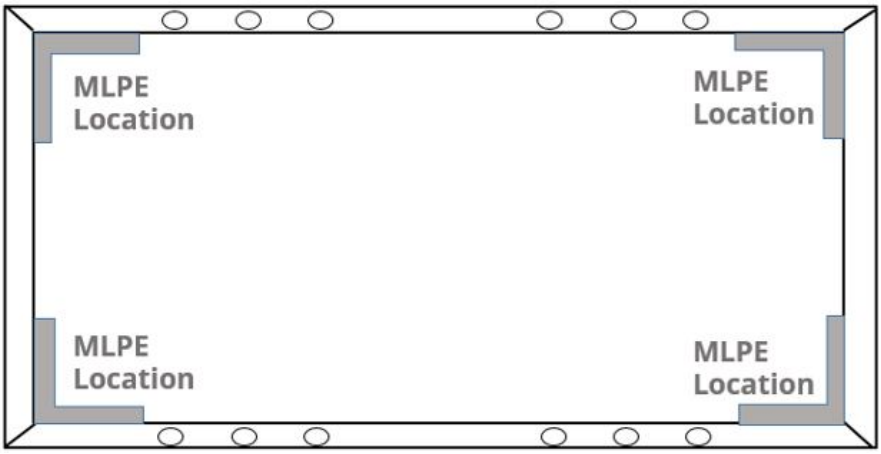

Figure C.1 - MLPE device installation zones

ANNEX D: COASTAL AREA ANTI-CORROSION INSTALLATION GUIDELINES

D.1.0: GENERAL INFORMATION

- According to the specific conditions stipulated in the Canadian Solar installation manual and general warranty statement, Canadian Solar PV modules are not allowed to be installed in coastal areas. Coastal areas are defined as places located within 100m of the defined coastline.
- This annex has been created to facilitate approval for customer PV installations located within 20 m and 100 m of the coastline. It lays down general requirements to ensure that Canadian Solar PV modules are installed properly and reliably in coastal areas, which include but are not limited to relevant anti-corrosion principles for both the modules and associated mounting systems. This annex summarizes the key technical requirements stipulated by well-known international standards and explains how they apply to photovoltaic systems.
- Please read this annex carefully and strictly follow any relevant instructions prior to installing Canadian Solar modules in coastal areas. Failure to follow these instructions and other general anti-corrosion principles may result in corrosion damage to the photovoltaic modules and/or their racking systems, and will void the Canadian Solar standard product and performance warranty. For further inquiries, please contact our customer service department or our local representatives for more information.
- The reliability of photovoltaic modules strongly depends on their distance from the coastline. Different coastal land areas are defined according to how far away from the coastline they are; Canadian Solar generally classifies seashore PV installations according to four different groups:

Distance from the coastline (X: meters)	Requirements
X≤20m	Installation strictly prohibited by Canadian Solar due to concerns of salt-mist corrosion.
20m<X≤100m	Installations must comprise of Canadian Solar "special-anti-corrosion" modules. These installations must comply with the instructions listed below section D.2.1/D.2.2/D.2.3/ D3.0.
100m<X≤500m	We recommend installing Canadian Solar "special-anti-corrosion" modules. We recommend following the instructions listed under sections D.2.1/D.2.2/D.2.3/D.3.0
>500m	Follow section 7.0

- Local conditions strongly influence the salt deposition rate, which is particularly, but not exclusively, dependent on specific regions and local wind patterns. Canadian Solar reserves the right to adapt the above definition to individual cases. Please contact your local representative to confirm which category your PV system falls under.
- The word "coastline" in this manual refers to the area where the land meets the sea during high tide.
- In this manual, "distance to the coastline" refers to the shortest distance between the photovoltaic module array and the coastline.
- Please consult the Canadian Solar technical support department or your local representative for more information on installing "special anti-corrosion" modules.

D.2.1: GENERAL ANTI-CORROSION METHODS

- Do not scratch or break the corrosion-resistant coating on the modules or mounting systems during installation.
- Do not change the structure of the module, i.e. by drilling holes into the module frame.
- Process specifications for the different components must comply with relevant international anti-corrosion standards.
- All general requirements listed in the Canadian Solar standard manual should be applied when installing "special-anti-corrosion" modules.

D.2.2: SPECIAL ANTI-CORROSION METHODS FOR MOUNTING

- Use mounting components that contain the same metals or metals with a similar electrochemical potential. The metal's coating also should be taken into account. There may be a big difference between the electrochemical potentials of two different coating materials.
- If mounting components consist of two metals with a big difference in electrochemical potential, please add insulating washers (e.g. bi-metallic washers or insulation gaskets) to isolate the metals from each other.
- Copper/aluminum bi-metallic washers are commonly available to prevent electrochemical corrosion. These washers are made in a process called explosion welding.
- Concerning insulation gaskets, mica laminate, or other silicone or fluoride-based insulating materials are recommended.

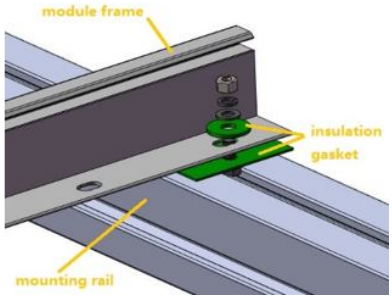

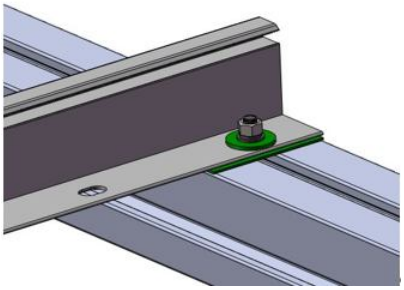

D.2.3: ANTI-CORROSION METHOS FOR GROUNDING

- Two special anti-corrosion methods for protecting the system's grounding devices are recommended. Please refer to the instructions in the table below:

Item	Method A	Method B
Coating components	Fluorocarbon varnish (one layer)	Layer 1 (metal side): epoxy zinc rich primer Layer 2 (middle layer): fluorocarbon finish paint Layer 3 (air side): fluorocarbon varnish
Coating thickness	40μm	Layer 1 (metal side): 40μm Layer 2 (middle layer): 40μm Layer 3 (air side): 40μm
Painting interval	/	Follow the supplier's general requirements when painting the three coating layers. Apply the middle layer 24 hours after painting layer 1. Paint the air side layer 6 hours later after painting the middle layer.

General requirements	Clean the grounding components and make sure that they are dry and clean. The coating must cover all of the grounding components and junction areas of the module frame or mounting system. Please refer to the figure below for more details. The coating should be applied in a dry atmosphere (at least 24 hours) under the following conditions: relative humidity RH⩽75%, ambient temperature T>5°C.	
Maintenance period	Three months	Five years

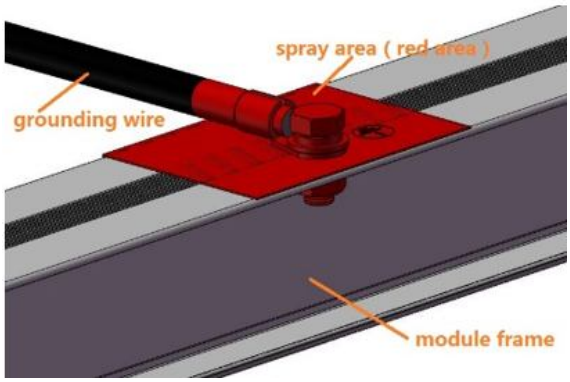

D.3.0: ANTI-CORROSION SUGGESTIONS FOR THE RACKING SYSTEM

- Suggestions for the racking system are provided below. The warranty does not cover the damage to the mounting system caused by corrosion if the mounting system is not provided by Canadian Solar The requirements below apply to two main mounting systems: aluminum alloy-based and Al-Mg-Zn alloy-based racking for rooftops and galvanized steel-based structures for ground-mounted solar farms. To prevent salt-mist corrosion, Canadian Solar requires strict compliance with the following principles:

– Use approved corrosion-resistant materials (e.g. stainless steel SUS 316 or carbon steel with a hot-dip galvanized coating) for any racking or BOS components used in coastal areas.

– Process specifications for the different components must comply with relevant international anti-corrosion standards.

– Minimum coating thicknesses for hot-dip galvanized and anodizing oxide components must comply with the standard minimum requirements stipulated in JIS8641 and JIS8601.

Process	Minimum coating thickness	Standard
Hot-dip galvanizing (carbon steel)	HDZ55 (76um)	ISO1461 JIS8641
Anodizing oxide (aluminum alloy)	AA20 (20um)	ISO7599 JIS8601

- Use mounting components that contain the same metals or metals with a similar electrochemical potential. The metal's coating should also be taken into account. There may be a big difference between the electrochemical potentials of two different coating materials.

D.4.0: Precautions and General Safety

- Before installing any modules, contact the appropriate authorities to obtain any

relevant approvals and learn of any site, installation and inspection requirements.

- All instructions contained within this standard module installation manual should be followed.
- When applying coating materials, workers must follow applicable health and safety legislation and apply all respective preventive and proactive measures described within.

D.5.0: LIMITATION OF LIABILITY

- Canadian Solar shall not be held responsible for damages of any kind, including, but not limited to, bodily harm, injury and damage to property as a result of handling modules, installing systems, or compliance or non-compliance with the instructions set forth in this manual.

AMENDED EDITIONS AND DATES

- Rev 1.6 was amended and released on Apr, 2019
- Rev 1.7 was amended and released on May, 2019
- Rev 1.8 was amended and released on Sep, 2019
- Rev 1.9 was amended and released on Oct, 2019
- Rev 2.0 was amended and released on Dec, 2019
- Rev 2.1 was amended and released on Apr, 2020
- Rev 2.2 was amended and released on July, 2020
- Rev 2.3 was amended and released on Oct, 2020
- Rev 2.4 was amended and released on Jan, 2021
- Rev 2.5 was amended and released on March, 2021
- Rev 2.6 was amended and released on April, 2021
- Rev 2.61 was amended and released on April, 2021
- Rev 2.62 was amended and released on April, 2021
- Rev 2.7 was amended and released on June, 2021
- Rev 2.71 was amended and released on June, 2021
- Rev 2.8 was amended and released on July, 2021
- Rev 2.81 was amended and released on December, 2021

CSI Solar Co., Ltd.

199 Lushan Road, SND, Suzhou, Jiangsu, China, 215129

www.csisolar.com